Properties of bulk reacting absorbers subject to flow and temperature boundary layers

S. Boij, R. Glav

KTH - Royal Institute of Technology, MWL and Centre for ECO^2 Vehicle Design

A. Färm

Scania CV AB, Södertälje,

Background

Automotive applications

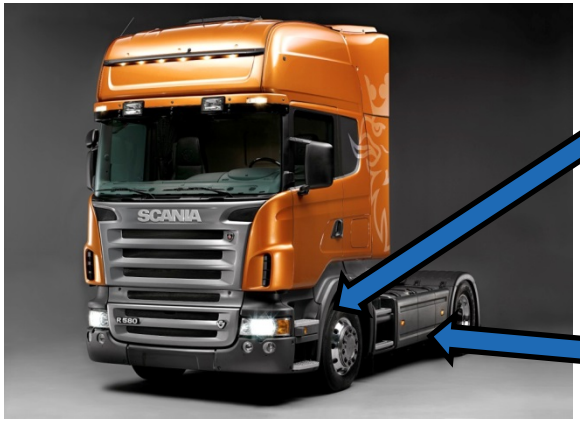

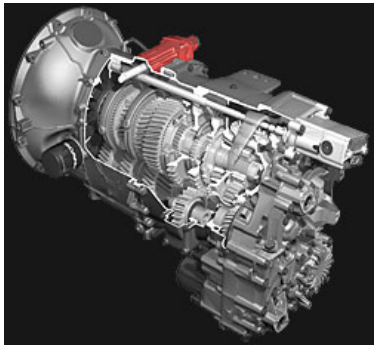

Noise encapsulations

$50 \leq f \leq 5000$ Hz

Grazing flow Mach no. < 0.2

Background

Complex sound and flow field

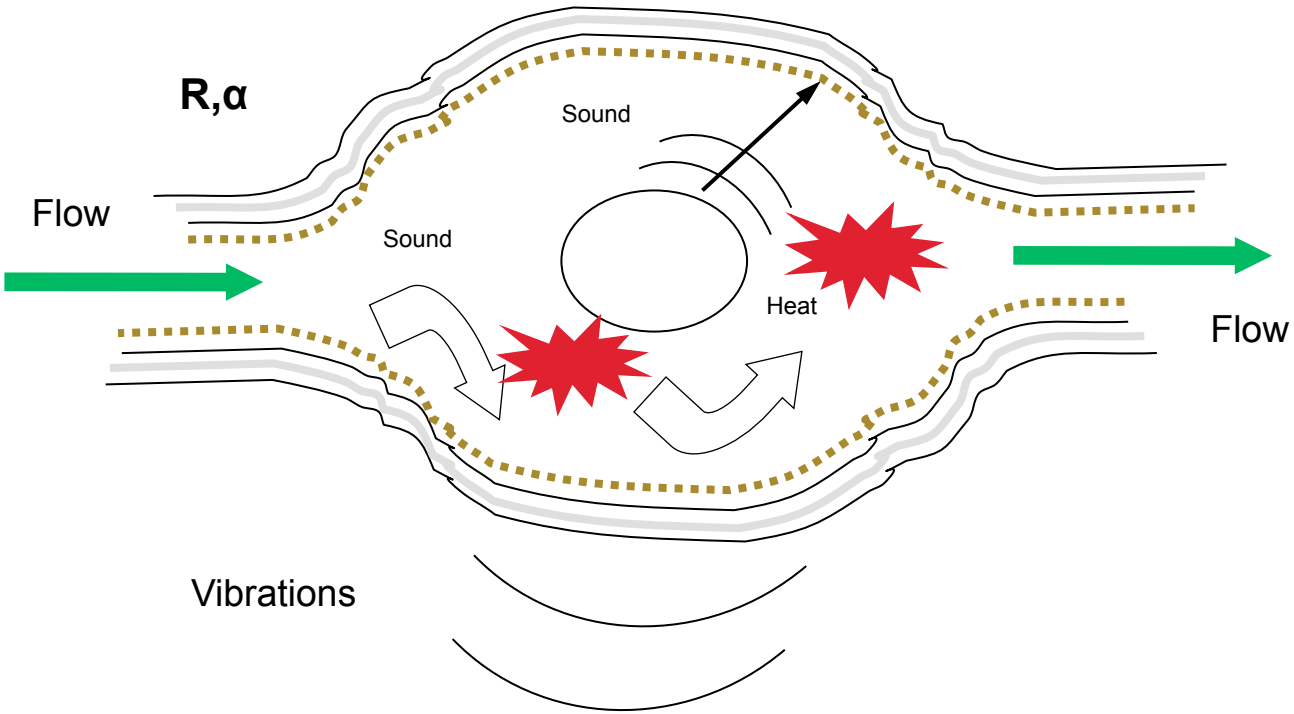

Noise encapsulation

Low Mach numbers

Bulk reacting liners

Strong temperature gradients

Surfaces close to source

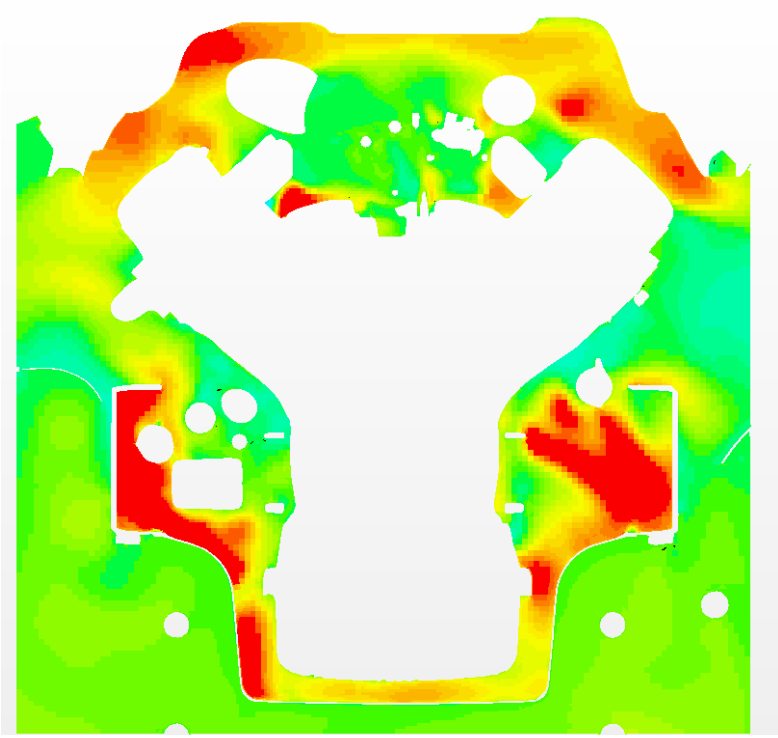

Problem

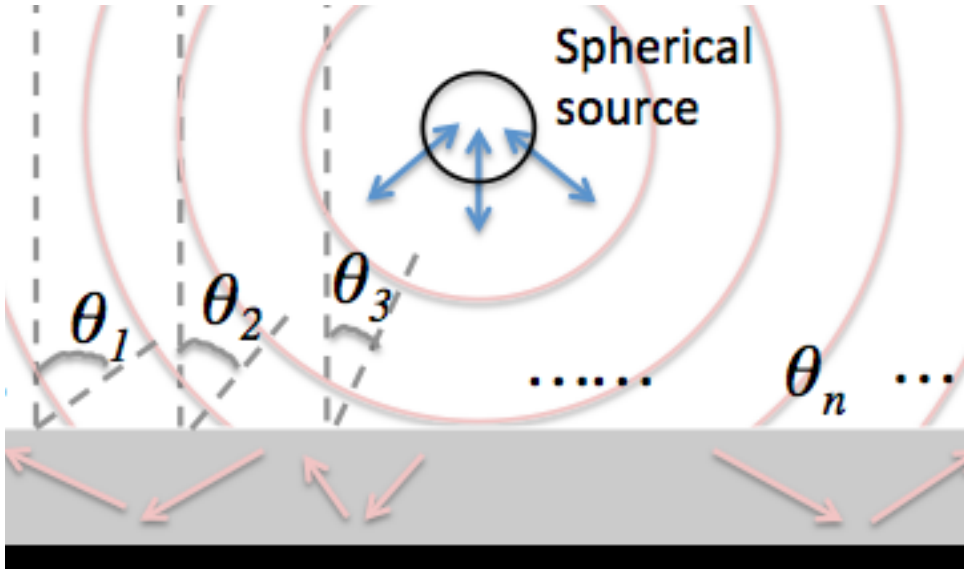

Generic case – plane wave incidence

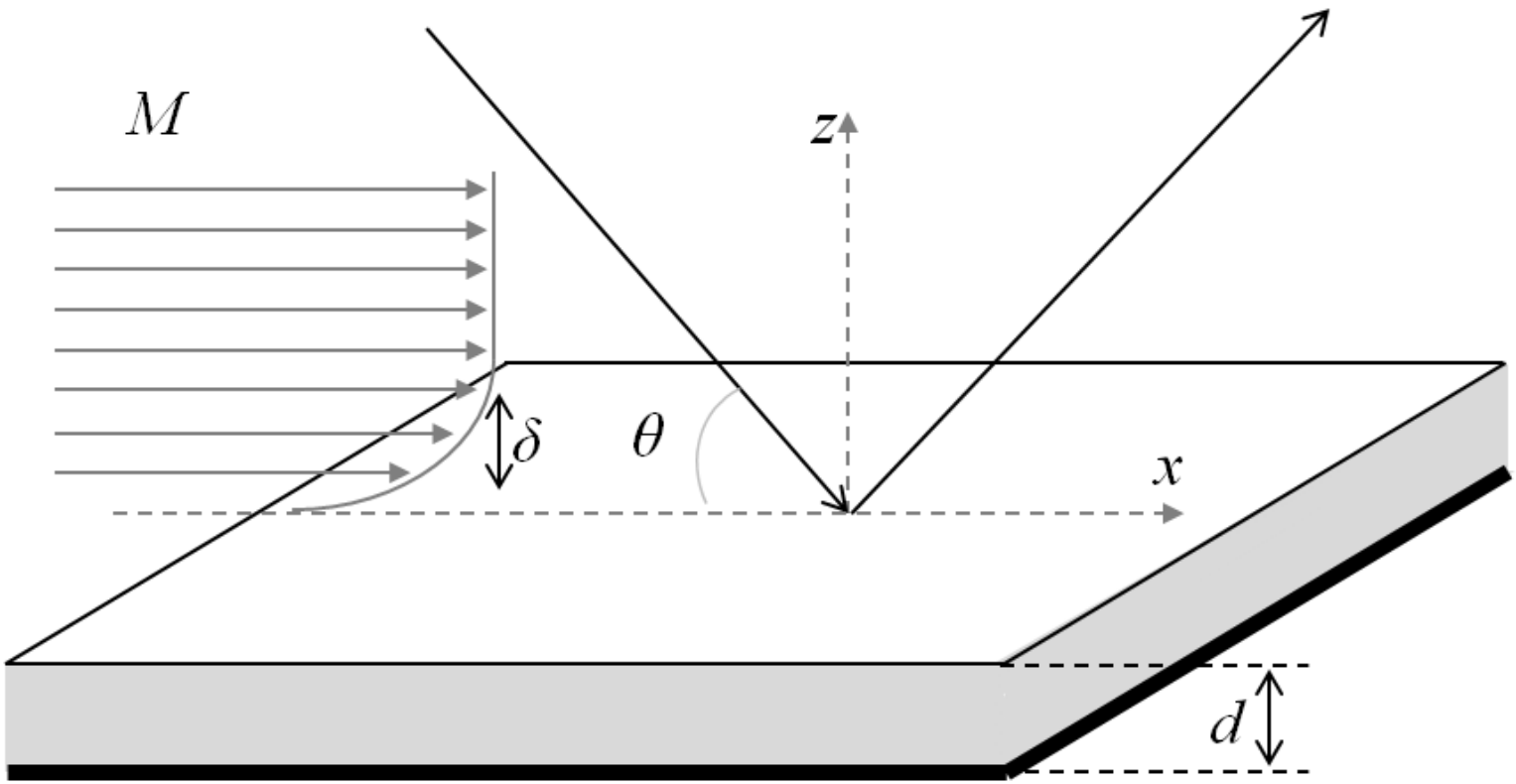

Bulk reaction

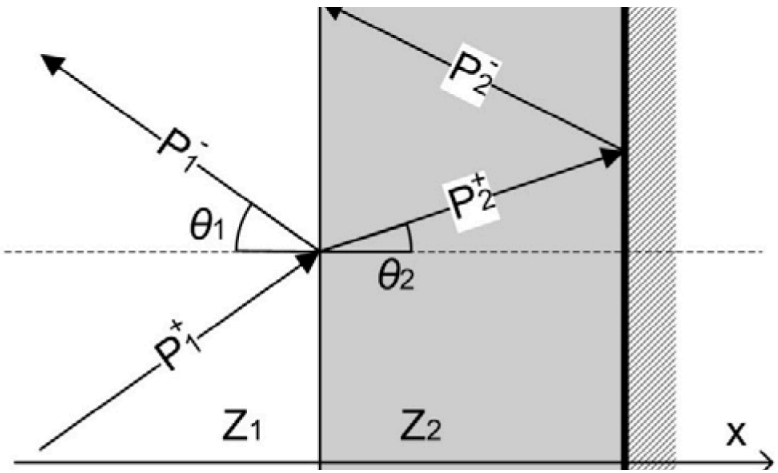

Local reaction

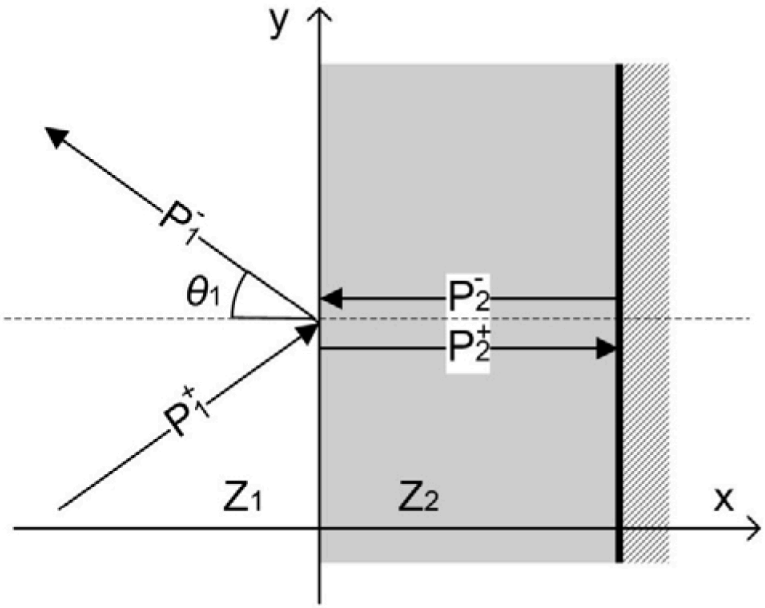

Absorber modelling – bulk reaction

Equivalent fluid model

- Transfer Matrix Method, TMM

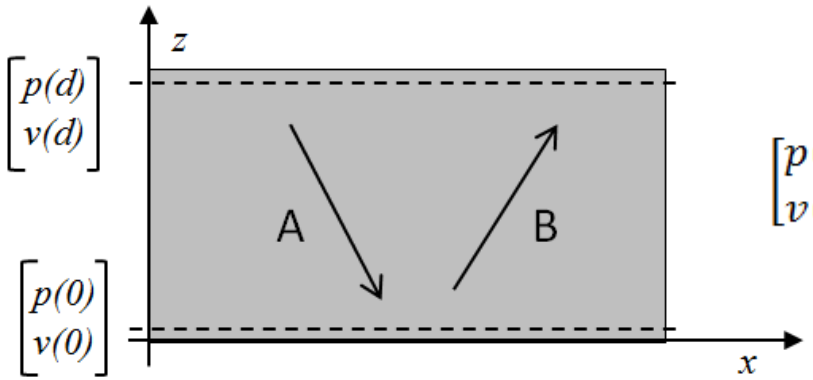

$$\begin{bmatrix} p(d) \\ v(d) \end{bmatrix} = \underbrace{\begin{bmatrix} \cos(k_z d) & \frac{i\omega\rho}{k_z}\sin(k_z d) \\ \frac{ik_z}{\omega\rho}\sin(k_z d) & \cos(k_z d) \end{bmatrix}}_{T} \begin{bmatrix} p(0) \\ v(0) \end{bmatrix}$$

Rigid backing, $v_0=0$

$$Z_s = T(1,1)/T(2,1)$$

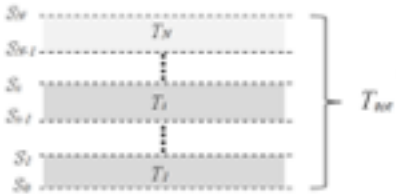

$$T_{tot} = \prod_{i=1}^{N} T_i$$

Boundary layer modelling

Discretizing the boundary layer with TMM

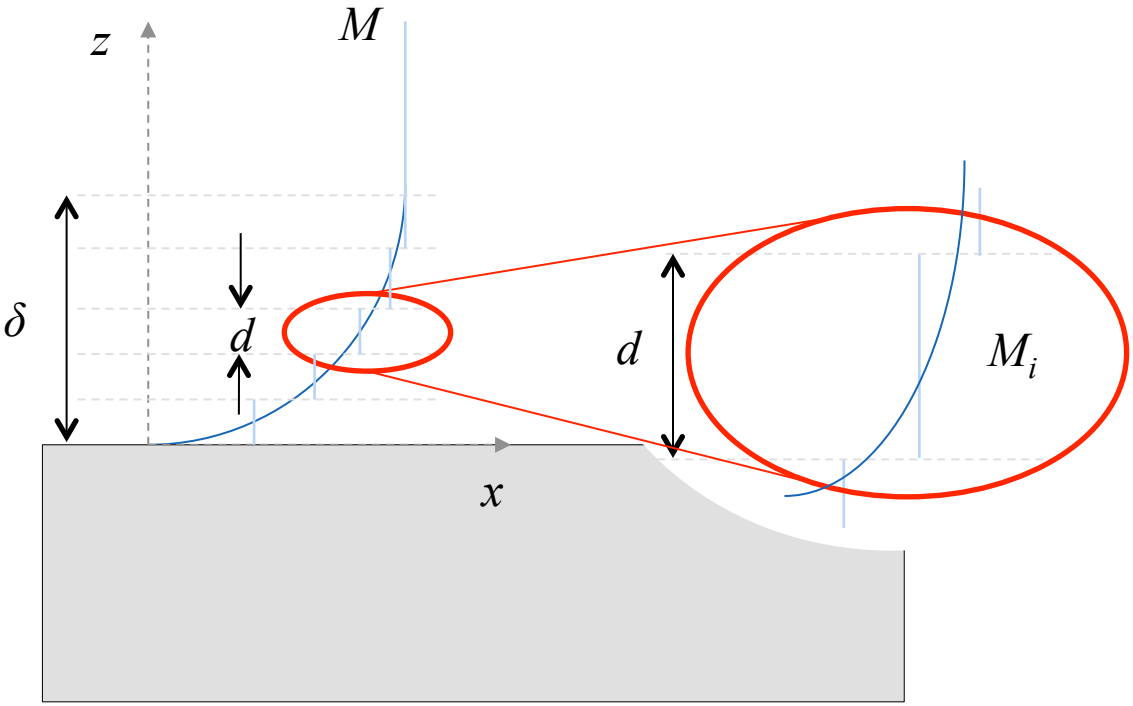

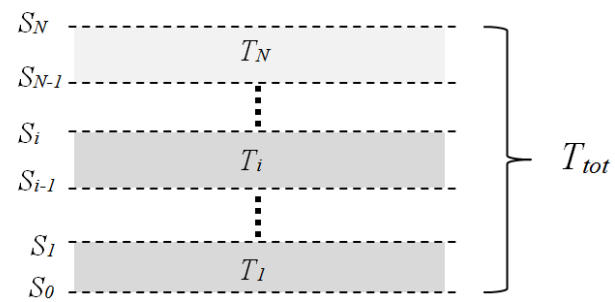

$$T_{tot} = \prod_{i=1}^{N} T_i$$

Boundary layer modelling

Discretization with gradients

- Extension of original TMM

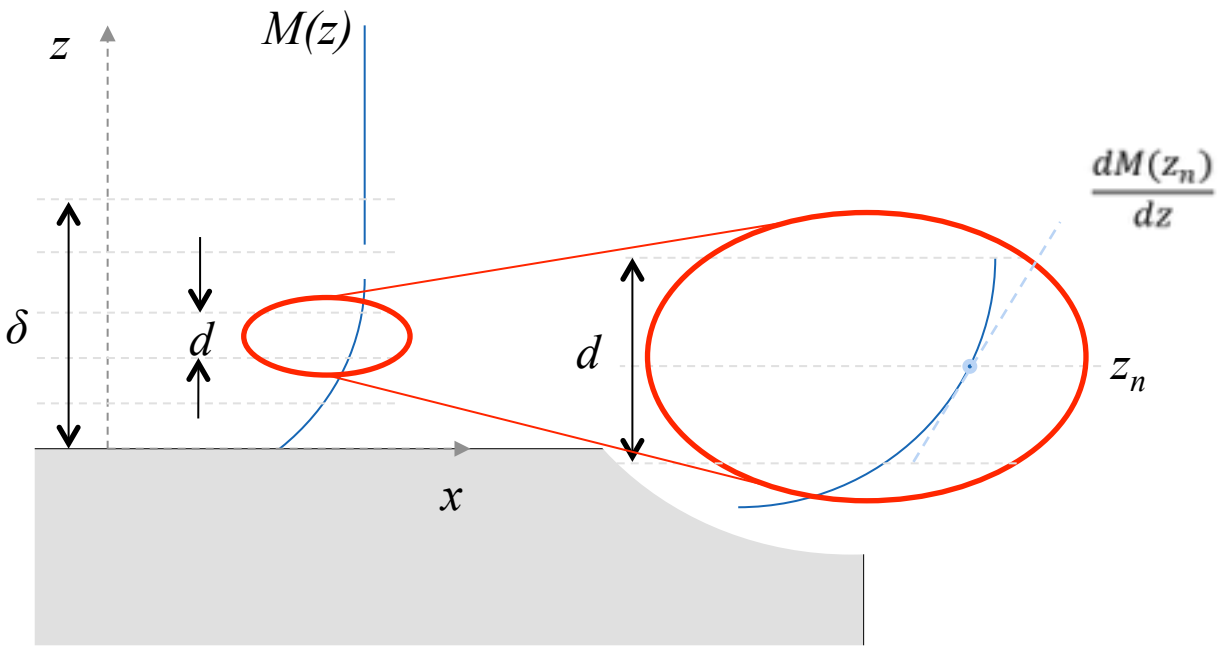

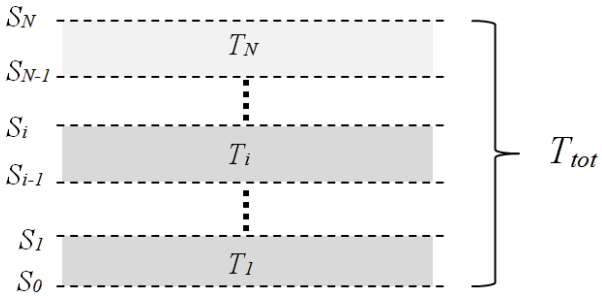

$$T_{tot} = \prod_{i=1}^{N} T_i$$

Flow boundary layer

- **Extended Transfer Matrix Method**

$$\frac{\partial \rho}{\partial t} + V\frac{\partial \rho}{\partial x} + \rho_0\left(\frac{\partial u}{\partial x} + \frac{\partial v}{\partial z}\right) = 0$$

$$\frac{\partial u}{\partial t} + V\frac{\partial u}{\partial x} + v\frac{\partial V}{\partial z} + \frac{1}{\rho_0}\frac{\partial p}{\partial x} = 0$$

$$\frac{\partial v}{\partial t} + V\frac{\partial v}{\partial x} + \frac{1}{\rho_0}\frac{\partial p}{\partial z} = 0$$

$$\frac{\partial}{\partial z}[S] = -[A][S]$$

$$[S] = \begin{bmatrix} p \\ v \end{bmatrix}$$

$$[T] = expm([A]d)$$

$$[A] = \begin{bmatrix} 0 & -i\rho(Vk_x - \omega) \\ -i\dfrac{c_0^2 k_x^2 - (\omega - Vk_x)^2}{\rho c_0^2(\omega - Vk_x)} & \dfrac{k_x}{\omega - Vk_x}\dfrac{\partial V}{\partial z} \end{bmatrix}$$

Flow boundary layer

- **Extended Transfer Matrix Method**

$$\frac{\partial \rho}{\partial t} + V\frac{\partial \rho}{\partial x} + \rho_0\left(\frac{\partial u}{\partial x} + \frac{\partial v}{\partial z}\right) = 0$$

$$\frac{\partial u}{\partial t} + V\frac{\partial u}{\partial x} + v\frac{\partial V}{\partial z} + \frac{1}{\rho_0}\frac{\partial p}{\partial x} = 0$$

$$\frac{\partial v}{\partial t} + V\frac{\partial v}{\partial x} + \frac{1}{\rho_0}\frac{\partial p}{\partial z} = 0$$

$$\frac{\partial}{\partial z}[S] = -[A][S]$$

$$[S] = \begin{bmatrix} p \\ v \end{bmatrix}$$

$$[T] = expm([A]d)$$

$$[A] = \begin{bmatrix} 0 & -i\rho(Vk_x - \omega) \\ -i\dfrac{c_0^2 k_x^2 - (\omega - Vk_x)^2}{\rho c_0^2(\omega - Vk_x)} & \dfrac{k_x}{\omega - Vk_x}\dfrac{\partial V}{\partial z} \end{bmatrix}$$

Flow boundary layer

- **Extended Transfer Matrix Method**

$$\frac{\partial \rho}{\partial t} + V\frac{\partial \rho}{\partial x} + \rho_0\left(\frac{\partial u}{\partial x} + \frac{\partial v}{\partial z}\right) = 0$$

$$\frac{\partial u}{\partial t} + V\frac{\partial u}{\partial x} + v\frac{\partial V}{\partial z} + \frac{1}{\rho_0}\frac{\partial p}{\partial x} = 0$$

$$\frac{\partial v}{\partial t} + V\frac{\partial v}{\partial x} + \frac{1}{\rho_0}\frac{\partial p}{\partial z} = 0$$

$$\frac{\partial}{\partial z}[S] = -[A][S]$$

$$[S] = \begin{bmatrix} p \\ v \end{bmatrix}$$

$$[T] = expm([A]d)$$

$$[A] = \begin{bmatrix} 0 & -i\rho(Vk_x - \omega) \\ -i\dfrac{c_0^2k_x^2 - (\omega - Vk_x)^2}{\rho c_0^2(\omega - Vk_x)} & \dfrac{k_x}{\omega - Vk_x}\dfrac{\partial V}{\partial z} \end{bmatrix}$$

Flow field – absorber

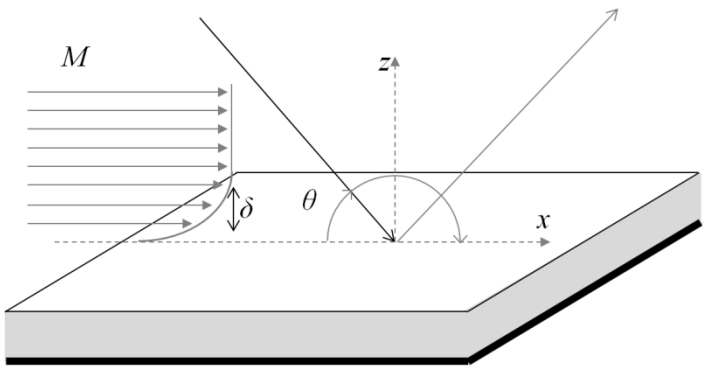

Absorber modelled as equivalent fluid

Analysed with Transfer matrix method

Boundary layer discretized

Each sub-layer calculated with the eTMM

Flow field, no flow and M =0.15
- local and bulk reacting liner

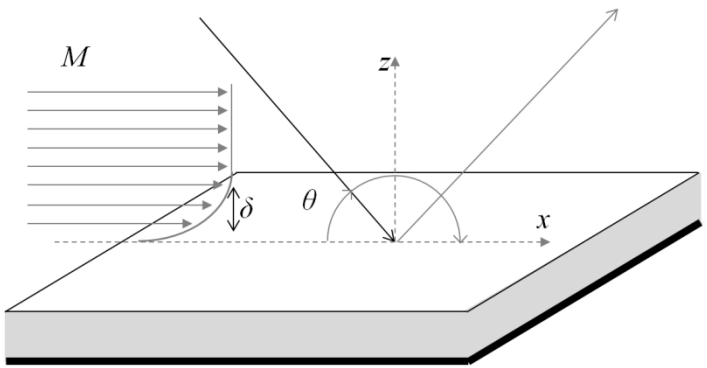

Local and bulk reaction

f = 3 kHz σ = 5 k Rayl/m

δ = 2 cm d = 2 cm

Flow field, no flow and M =0.15
- local and bulk reacting liner

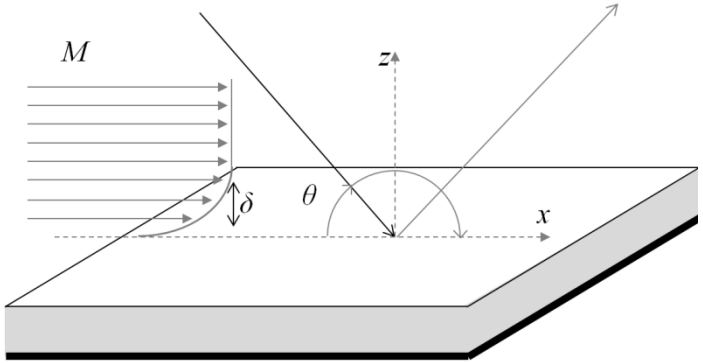

Local and bulk reaction
f = 3 kHz σ = 5 k Rayl/m
δ = 2 cm d = 2 cm

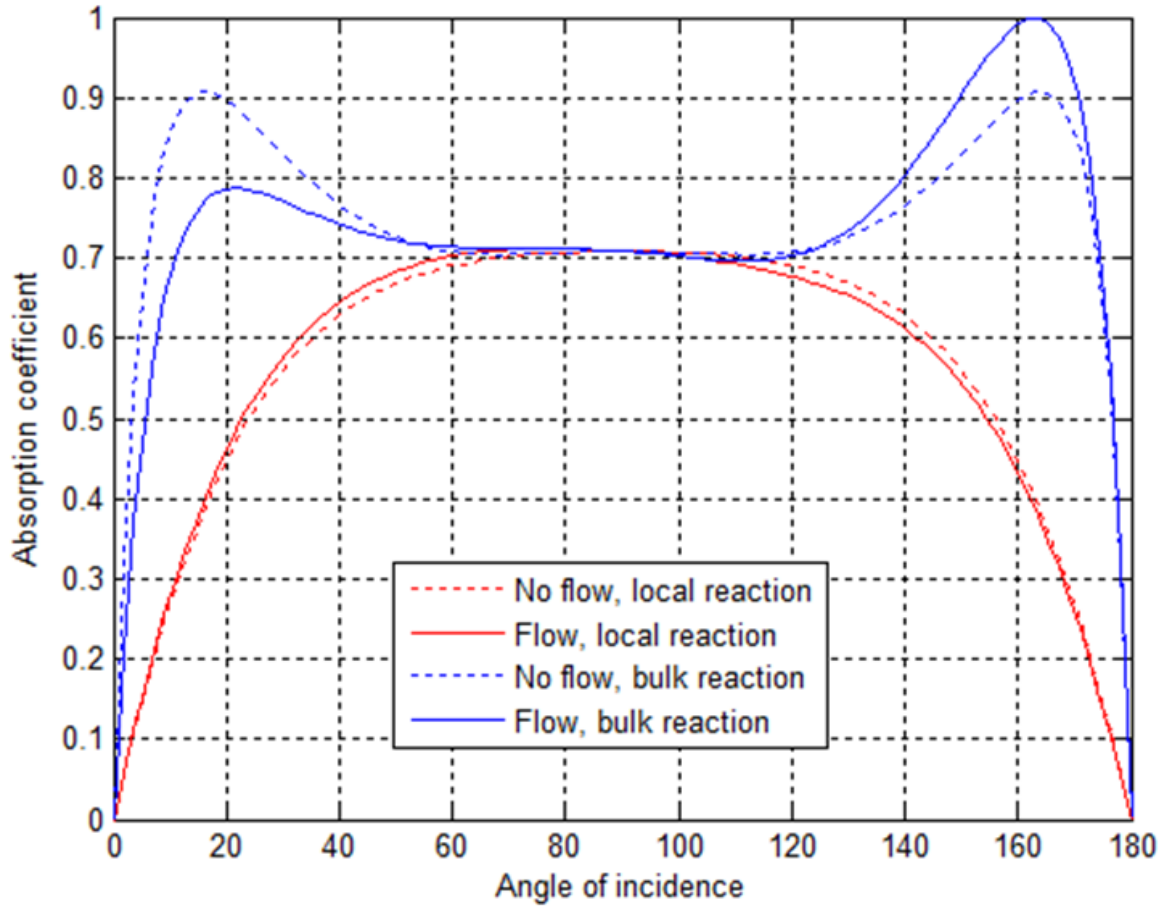

Flow field
- impact of increasing Mach number

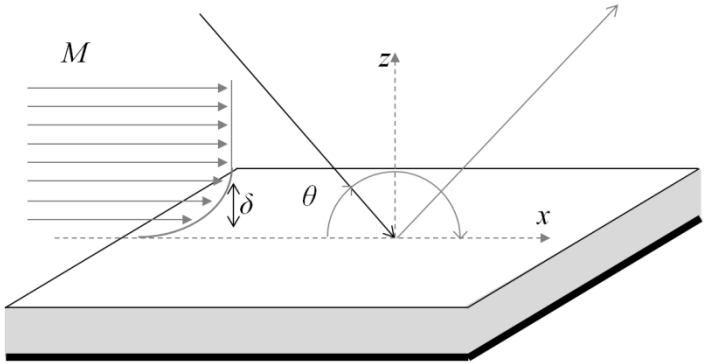

Bulk reaction

f = 3 kHz σ = 5 k Rayl/m

δ = 2 cm d = 2 cm

Flow field
- impact of increasing Mach number

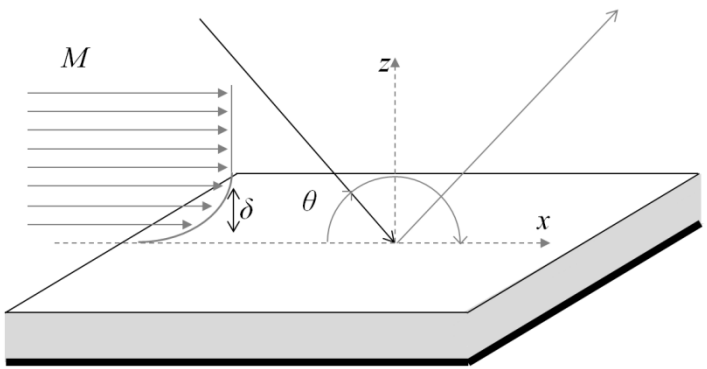

Bulk reaction

f = 3 kHz σ = 5 k Rayl/m

δ = 2 cm d = 2 cm

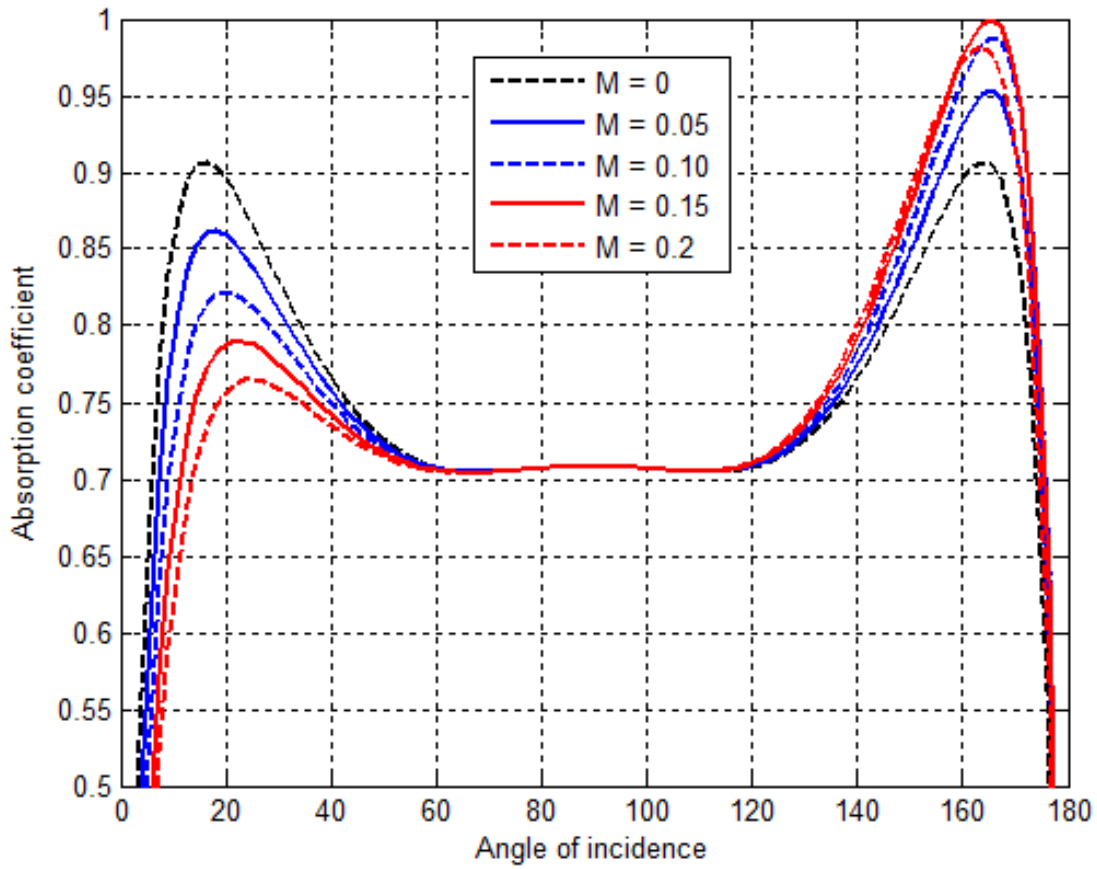

Temperature gradient and flow boundary layer

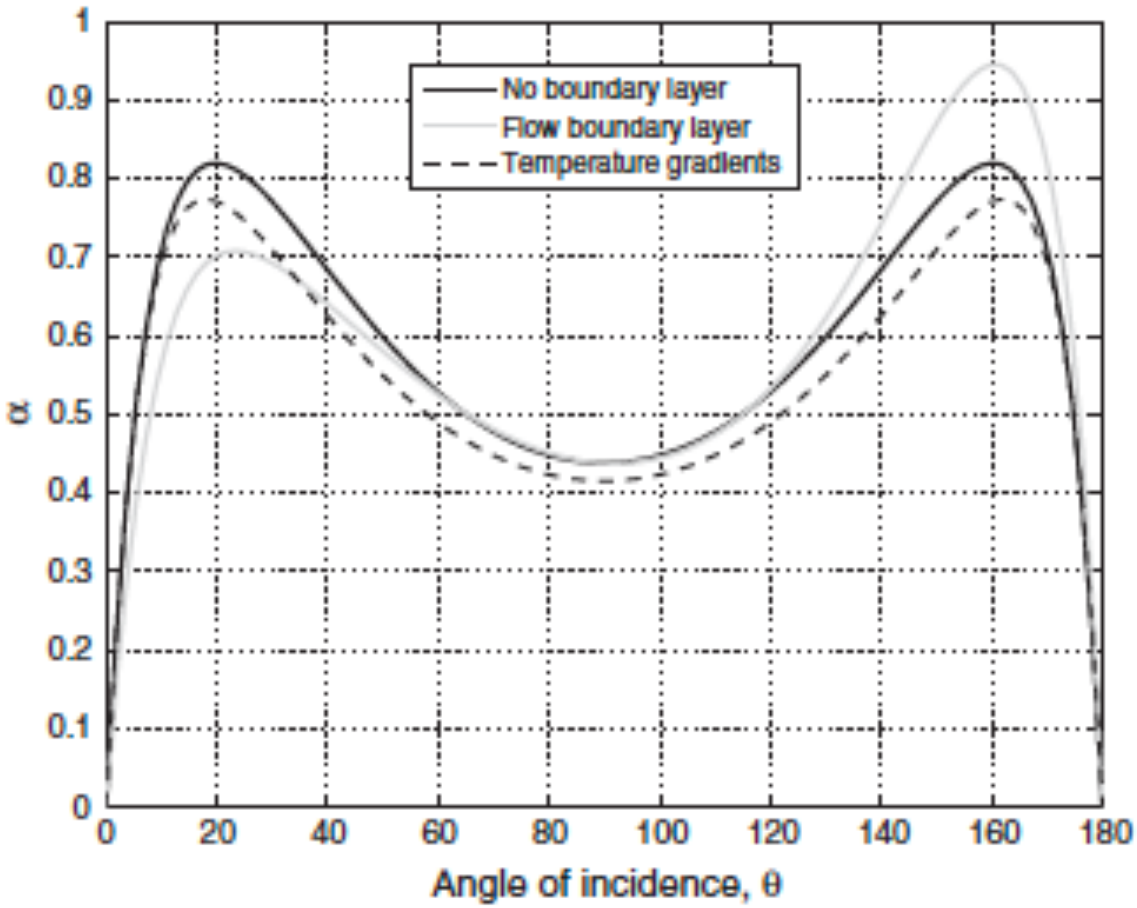

Diffuse field absorption– relative change

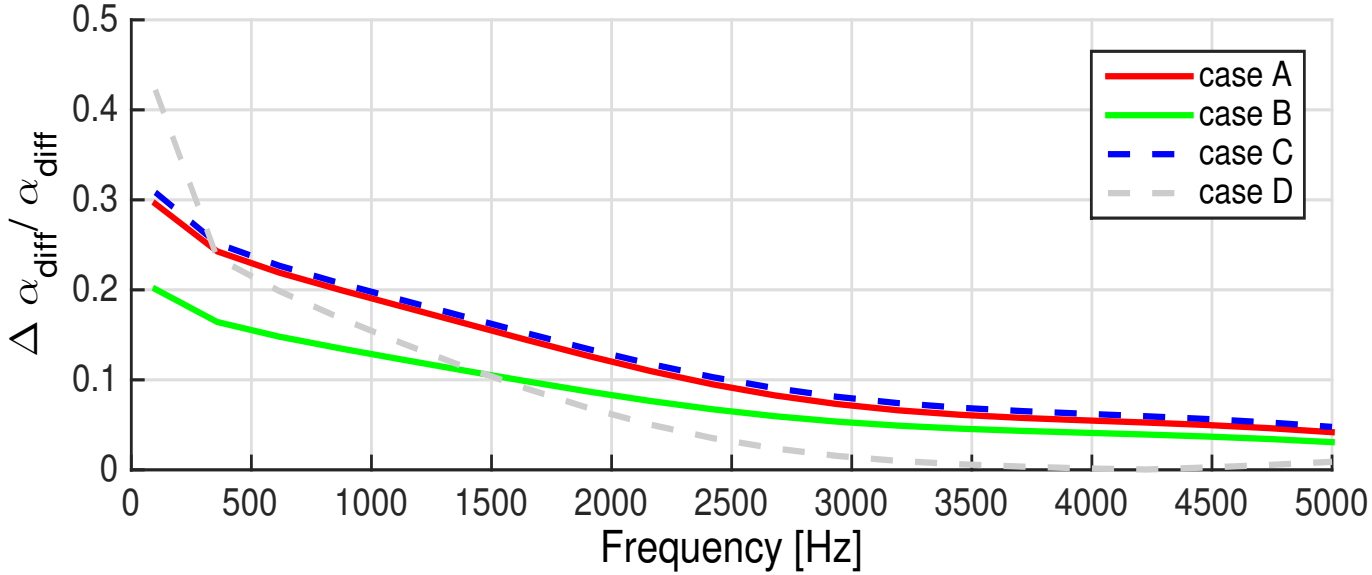

M_{max} = 0.05 – 0.1

T_{max} = 100 – 150 C

σ = 5 – 10 kRayls/m

boundary layer thickness 2 cm

Internal flow

Modified flow resistivity:

$$\sigma_v = \sigma_0 + 2\sigma_i|V_a|$$ parallel to sound propagation

$$\sigma_n = \sigma_0 + \sigma_i|V_a|$$ perpendicular to sound propagation

Flow profiles:

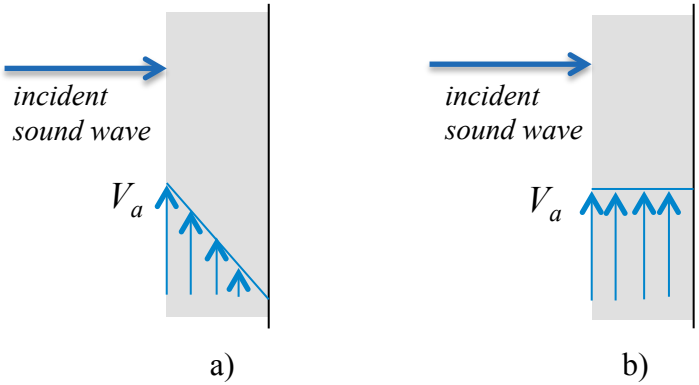

Absorption coefficient, normal incidence

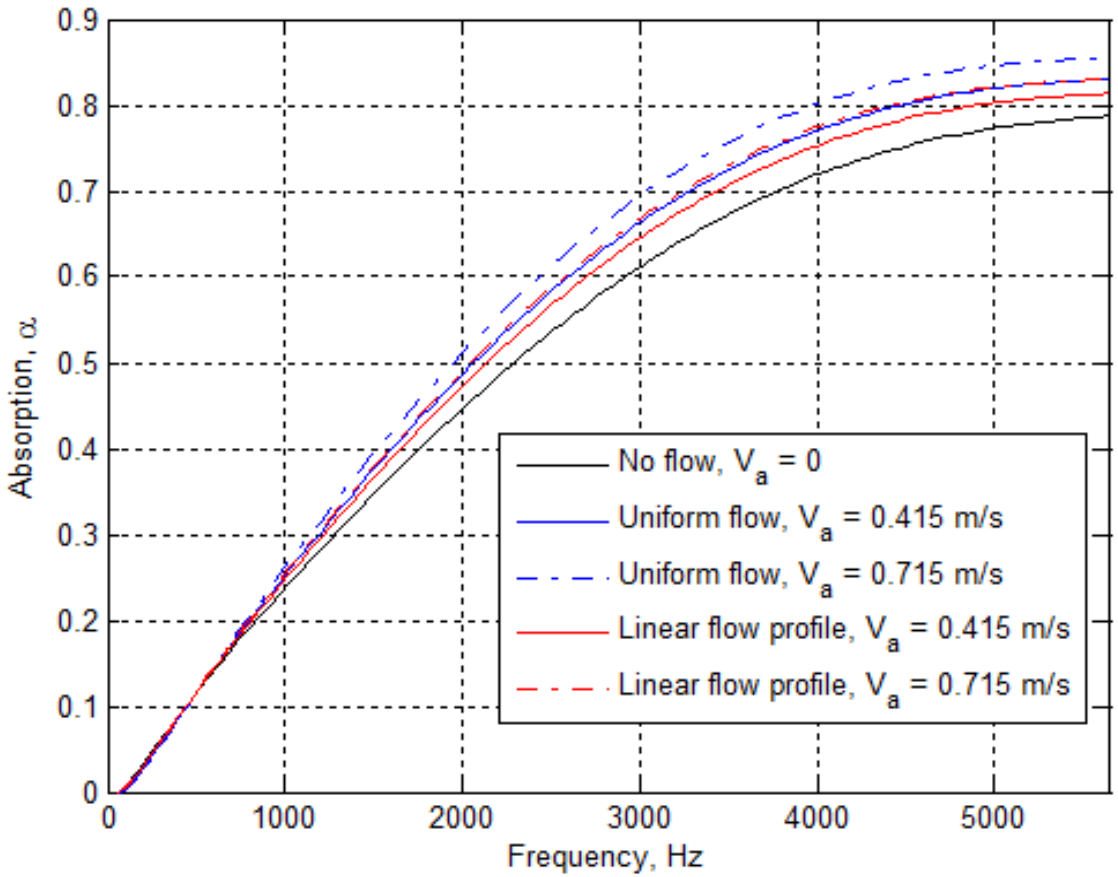

19.8 mm

σ_0 = 5430 Ns/m^4

σ_i = 3070 Ns^2/m^5

V_a = 0 m/s
V_a = 0.415 m/s
V_a = 0.715 m/s

Summary and conclusions

Effective surface impedance with transfer matrix method

Influence of flow, temperature and internal flow

Significant effects for bulk reacting absorber

The performance of the absorber depends strongly on the specific acoustic field

Acoustic absorption

- Absorption coefficient

$$\alpha(\theta) = 1 - \frac{W_{re}}{W_{in}}$$

- Surface impedance

$$Z_s(\theta) = \frac{p}{v_n} = \frac{\cos\theta}{\rho_0 c_0}\frac{1 + R(\theta)}{1 - R(\theta)}$$

Flow boundary layer
- transfer matrix method (TMM)

Reference solution :
Numerical solution of Pridmore-Brown

$$\frac{1}{c^2}\frac{\partial^2 p}{\partial t^2} = (1-M^2)\frac{\partial^2 p}{\partial x^2} + \frac{\partial^2 p}{\partial z^2} - 2\frac{M}{c}\frac{\partial^2 p}{\partial x \partial t} + 2\rho_0 c \frac{dM}{dz}\frac{\partial v}{\partial x}$$

Discretization of boundary layer

- TMM for each sub-layer in the boundary layer

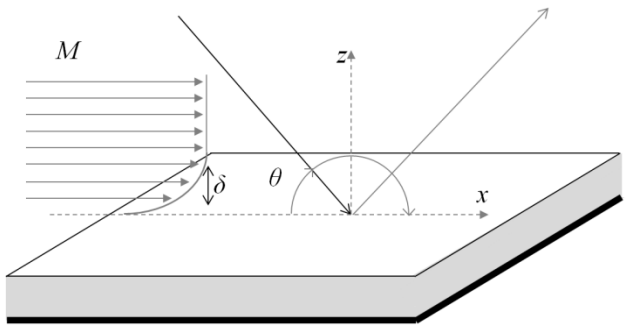

Verification

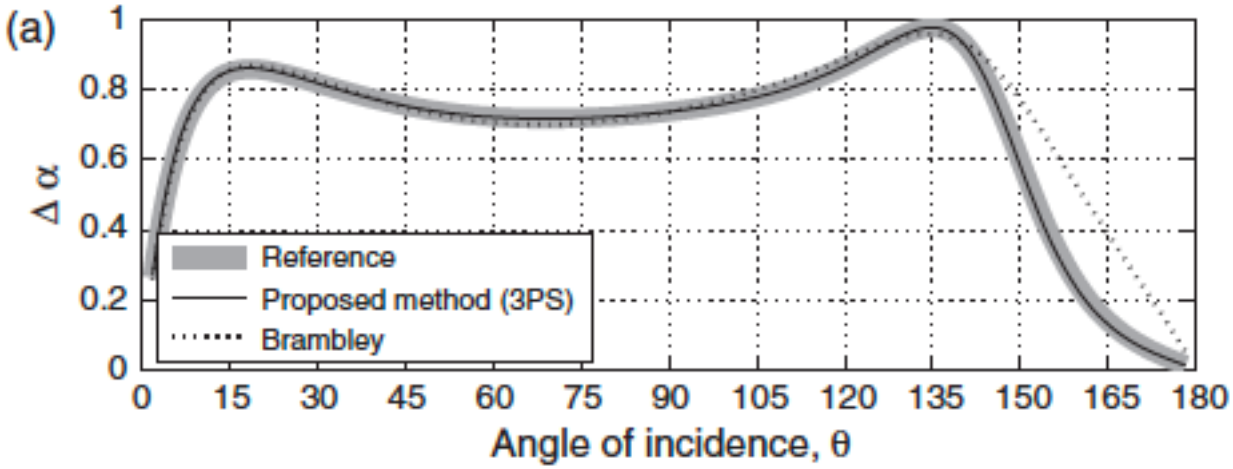

Determination of absorption and impedance

Reverberant field

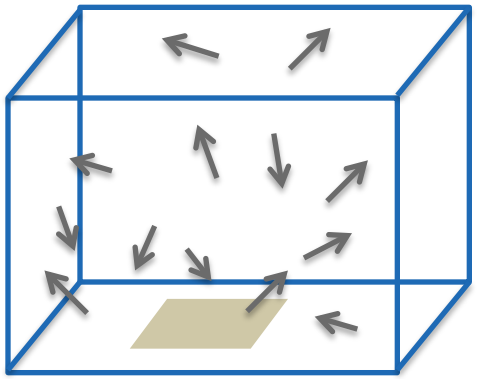

Plane waves

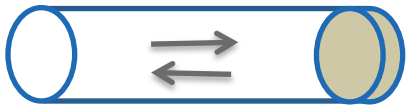

Duct modes

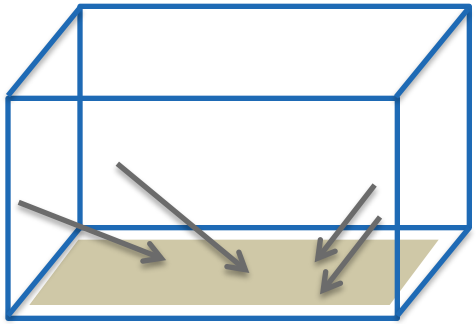

Absorbed energy varies with the sound field

Sound field

Standardized measurement methods
(idealized sound fields)

- Normal incidence

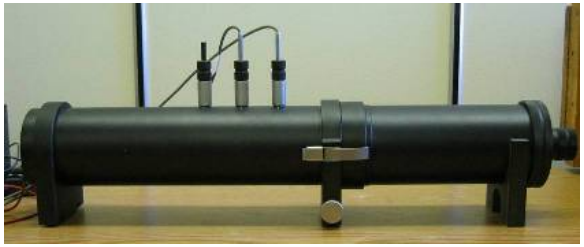

- Diffuse field

Sound field

$\sigma = 8$ k Rayl/m
$d = 2$ cm

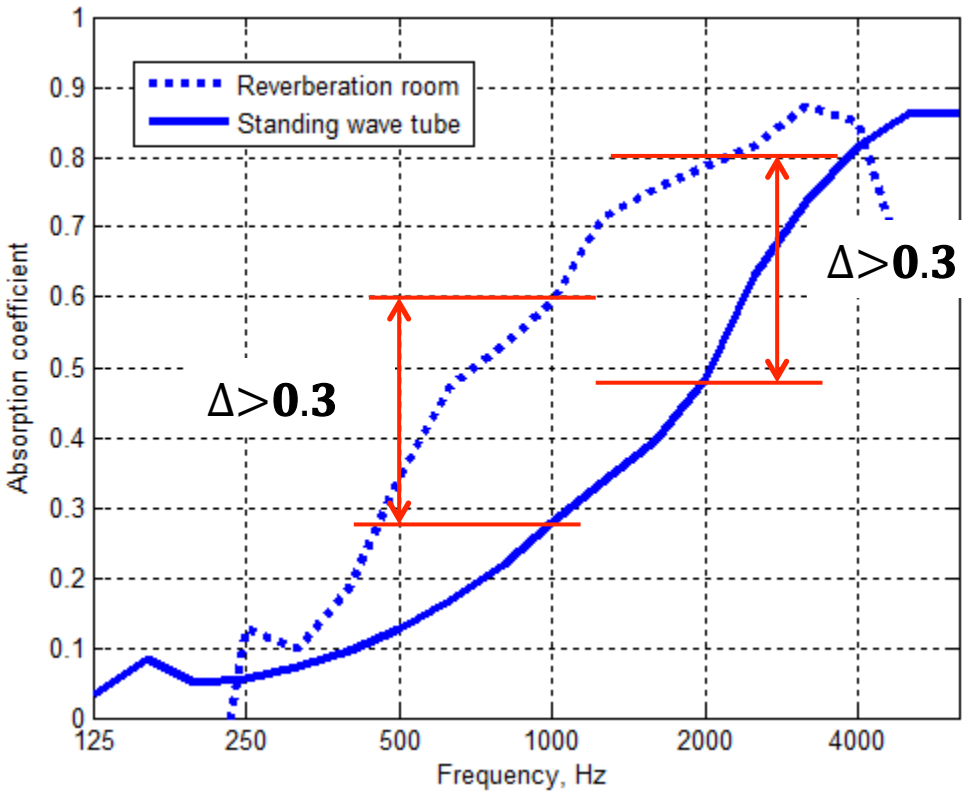

Overview

Pass-by noise test simulation

Transfer matrix model for absorber and medium above

Effects of flow, temperature and internal flow on absorber performance

Absorption performance is a global property: Depends on both material and sound field incident on absorber/lining

Impact on system level

Noise requirements on pass-by noise levels.

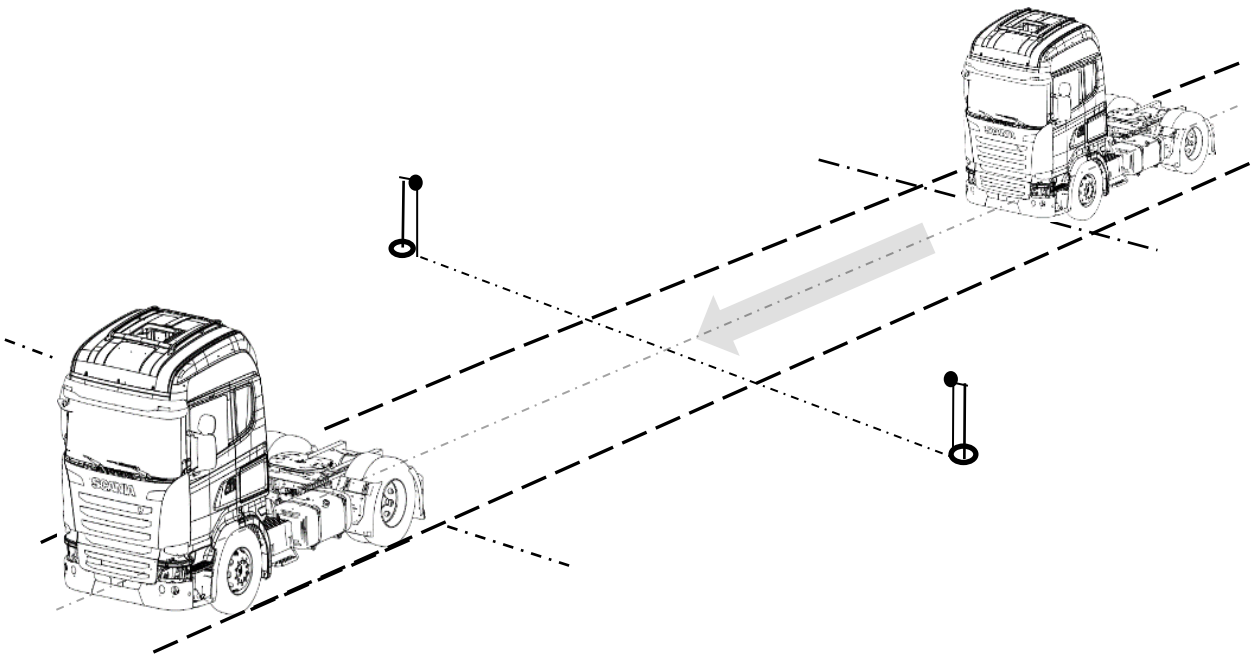

Pass-by simulation procedure in prototyping

1. Determination of the different sources.

2. Determination of the transfer function between each source and receiver position.

3. Construction of a time signal from each transfer function.

4. Summation of noise contribution from several sources to a total SPL(A).

Simulation of pass-by noise test

Simplified model of a truck

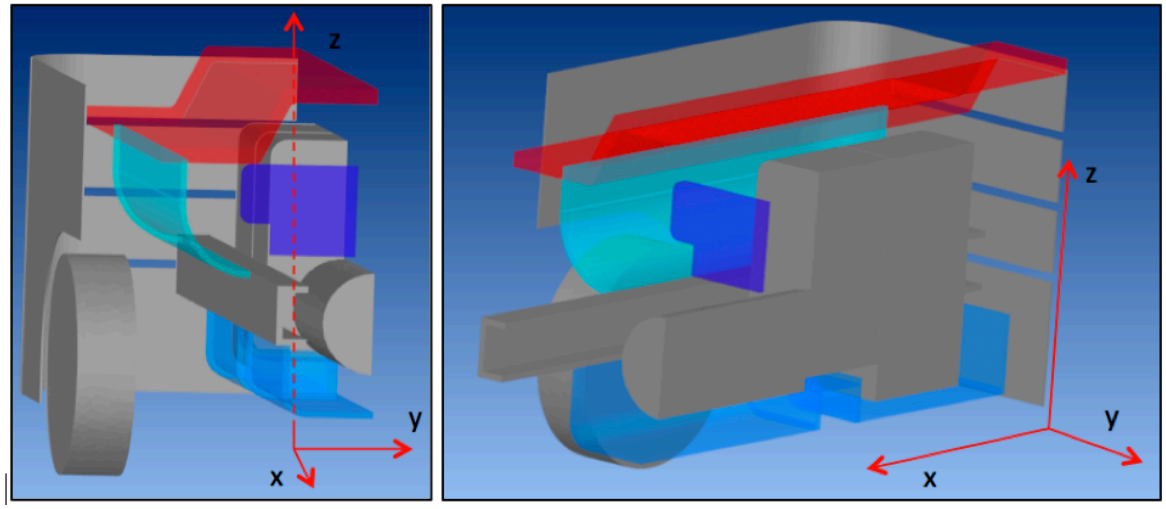

Simulation of pass-by noise

Simplified model of a truck

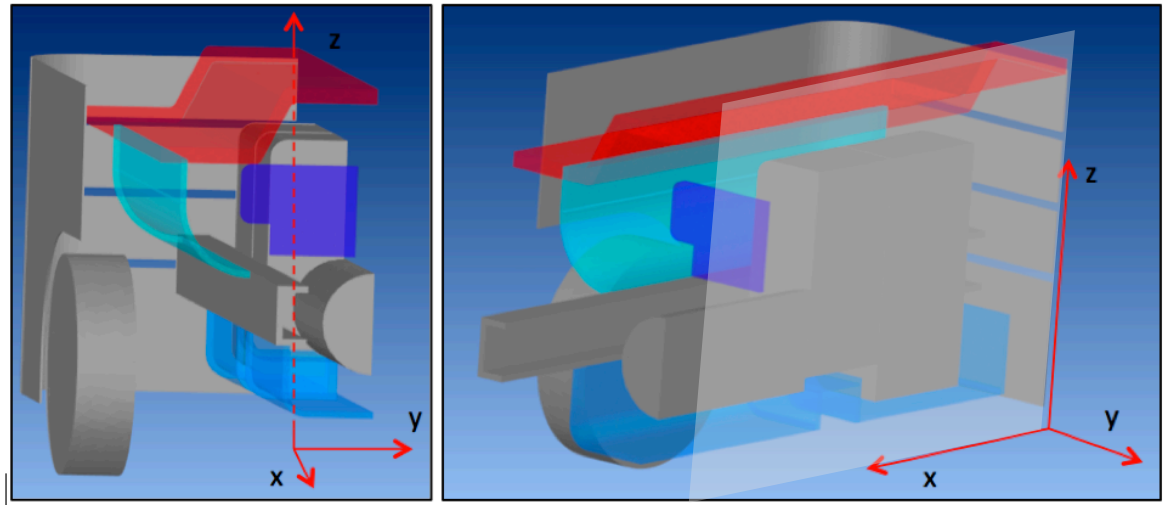

Symmetry plane

Simulation of pass-by noise

Simplified model of a truck

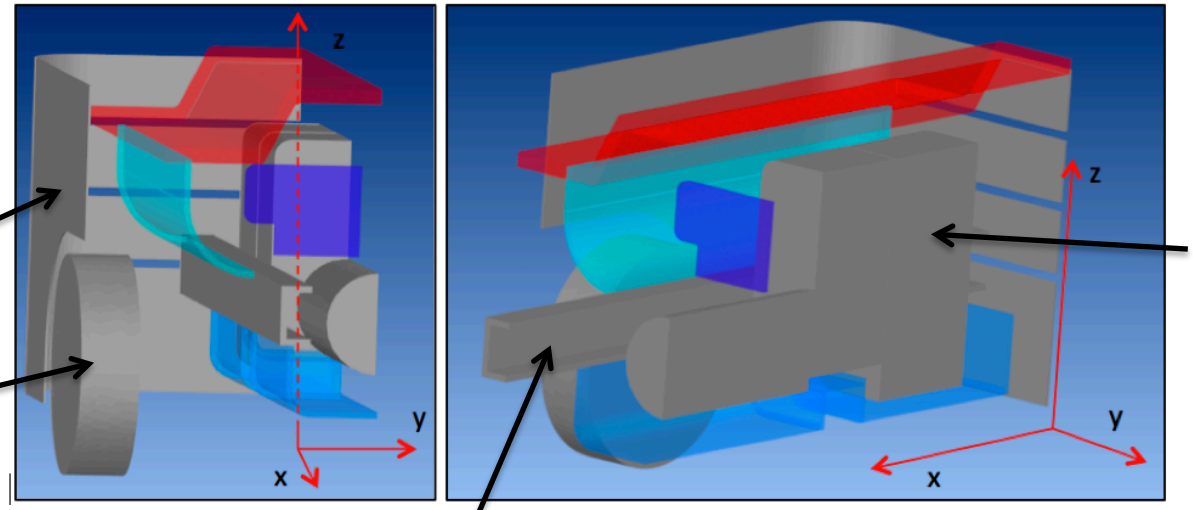

Panels

Wheel

Beam

Engine
+gearbox

Simulation of pass-by noise

Simplified model of a truck

Absorbers

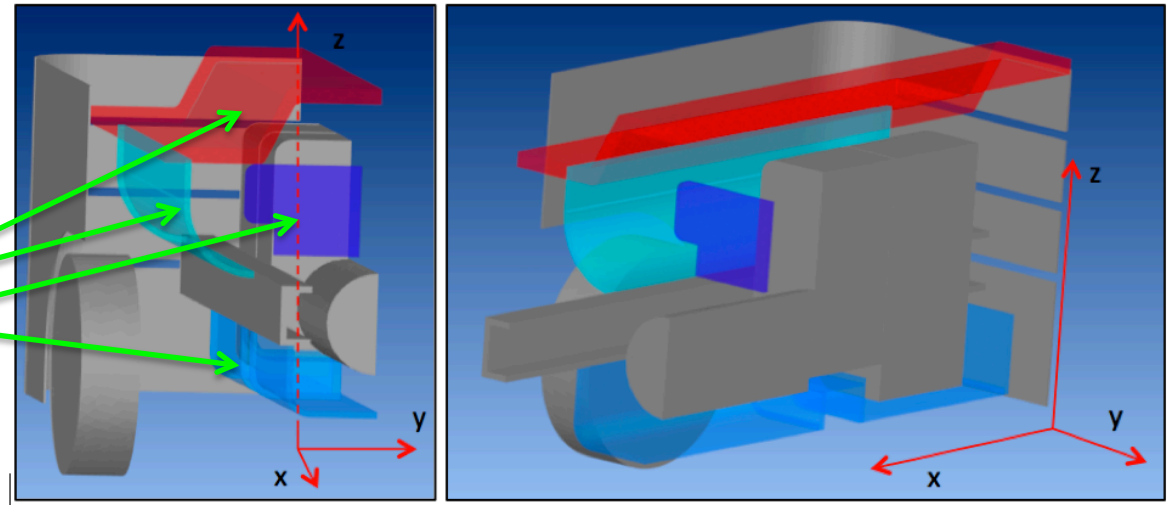

- Bulk reacting material (reference)
- Locally reacting surface
- Extended local reaction

Simulation of pass-by noise

Simplified model of a truck

Absorbers

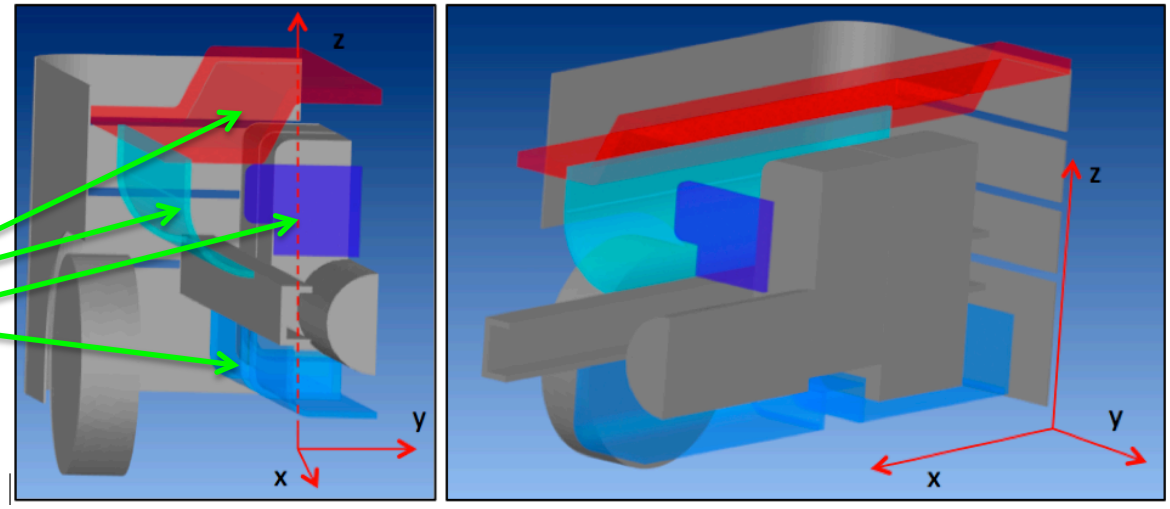

- Bulk reacting material (reference)
- Locally reacting surface
- Extended local reaction

Compare results

$$\Delta L_p = L_{p,X} - L_{p,bulk}$$

Problem

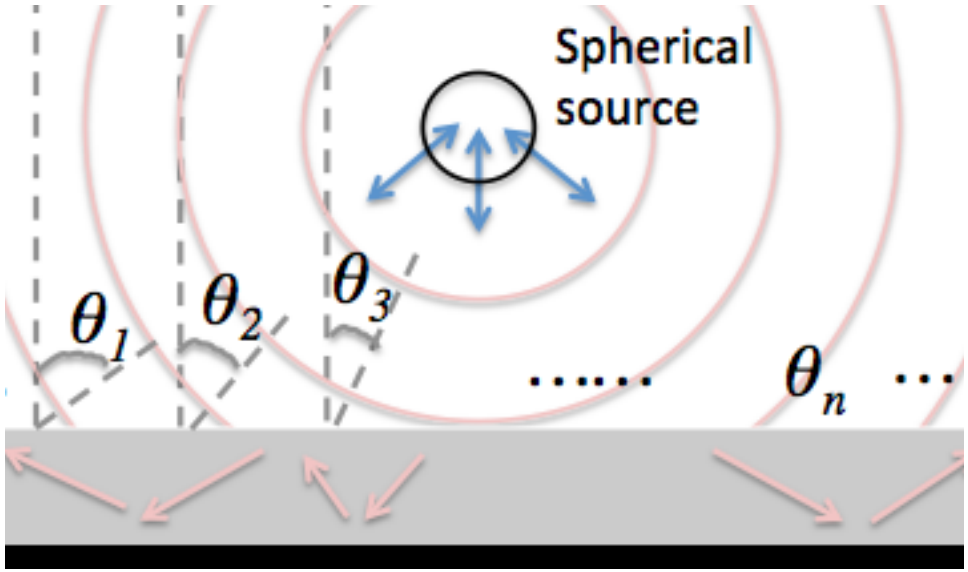

Bulk reacting

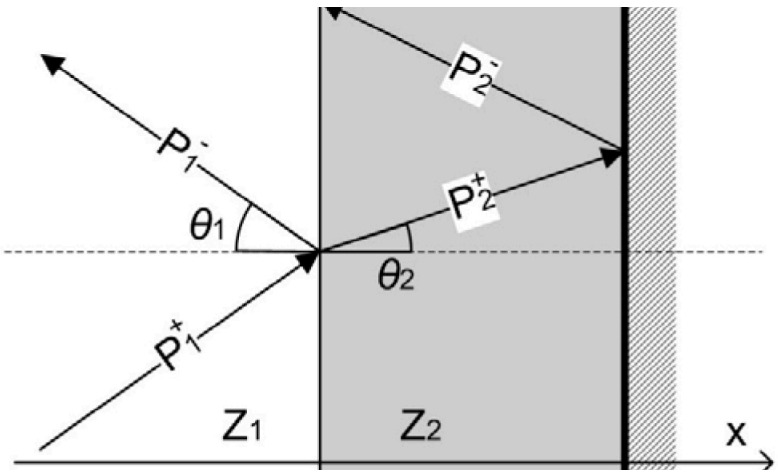

Locally reacting, Z_s

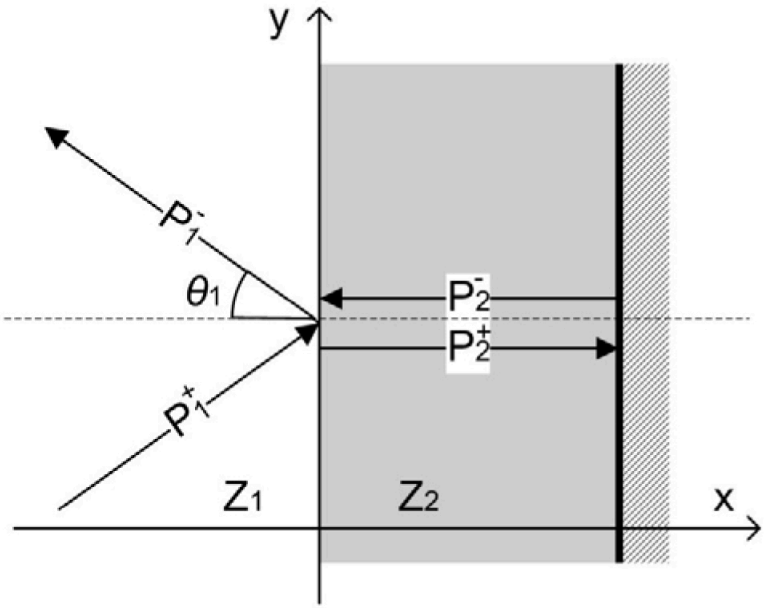

Extended local reaction

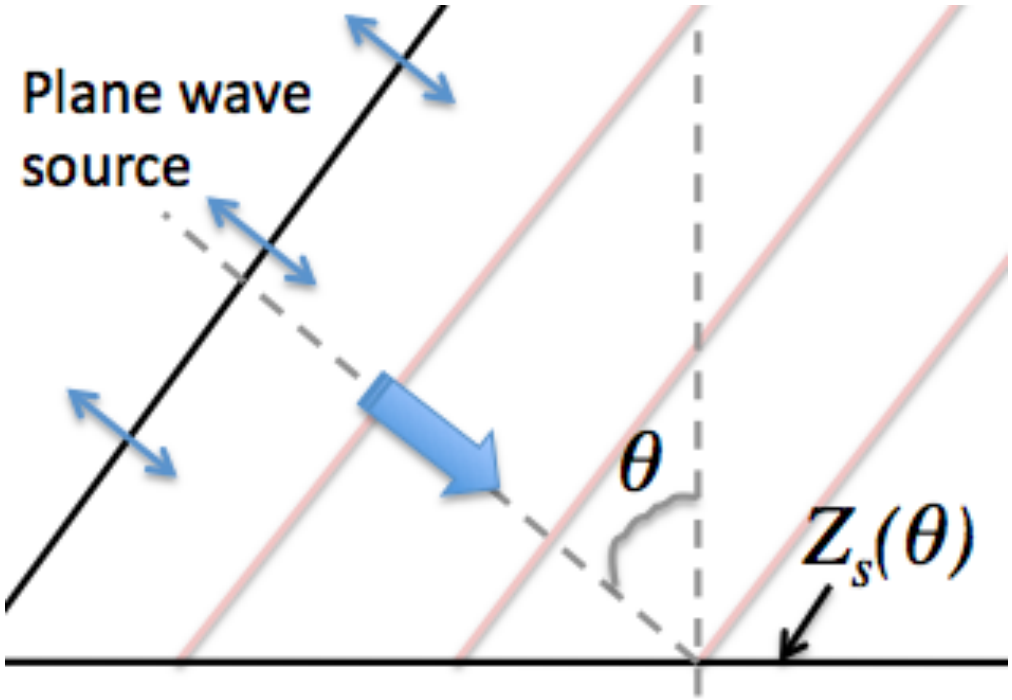

Simulation of pass-by noise

Simplified model of a truck

Absorbers

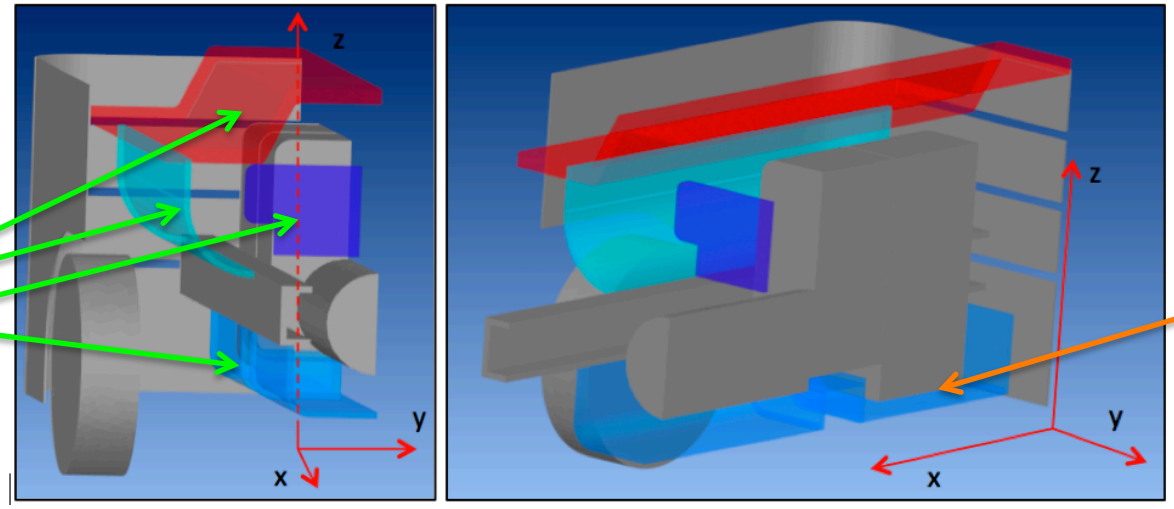

Source

- Bulk reacting material (reference)
- Locally reacting surface
- Extended local reaction

Compare results

$$\Delta L_p = L_{p,X} - L_{p,bulk}$$

Impact of absorber model (local, extended)

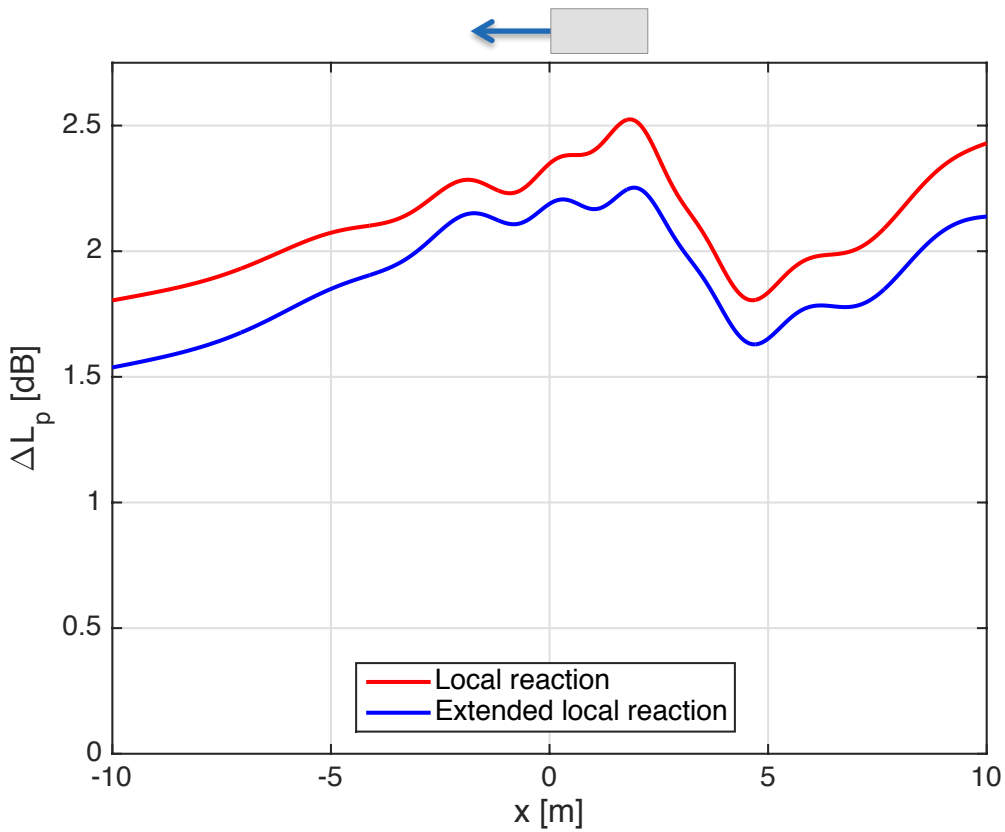

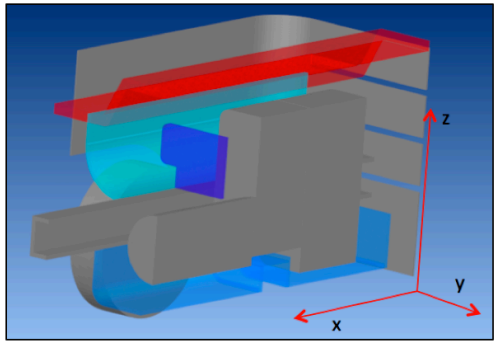

$$\Delta L_p = L_{p,X} - L_{p,bulk}$$

Impact of absorber model - different flow resistivity

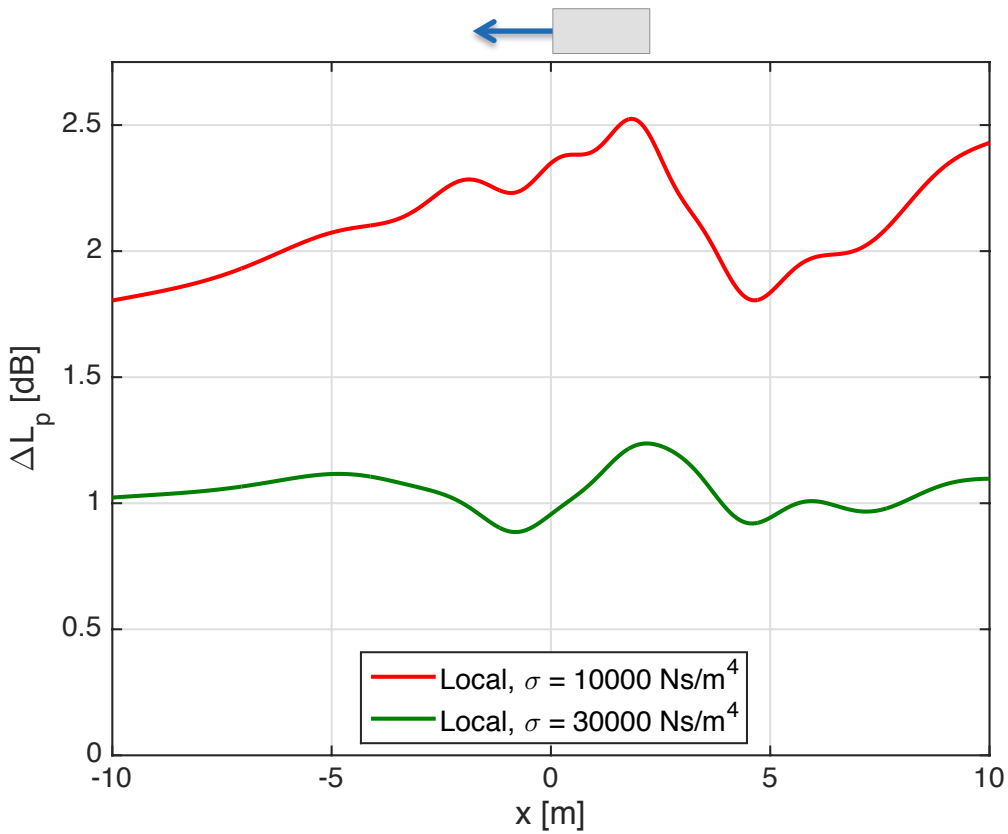

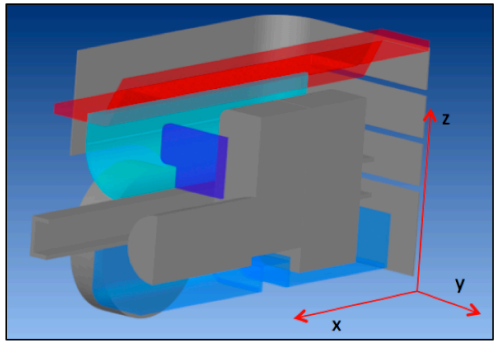

$$\Delta L_p = L_{p,x} - L_{p,bulk}$$

Impact of absorber model

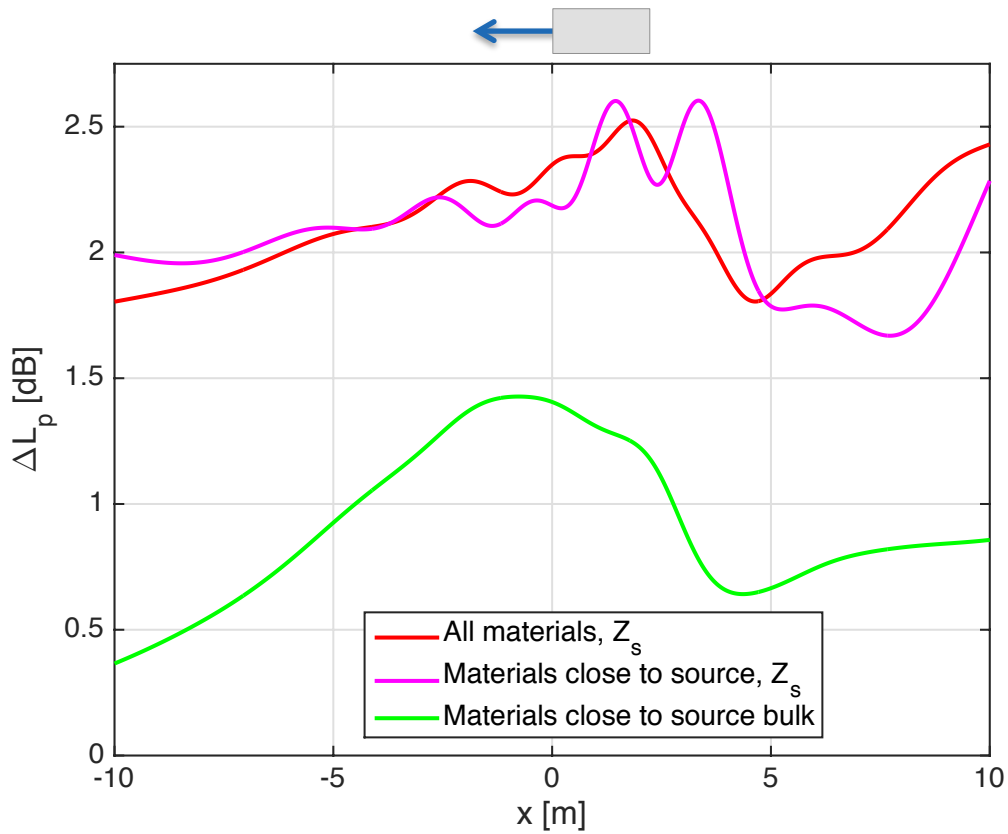

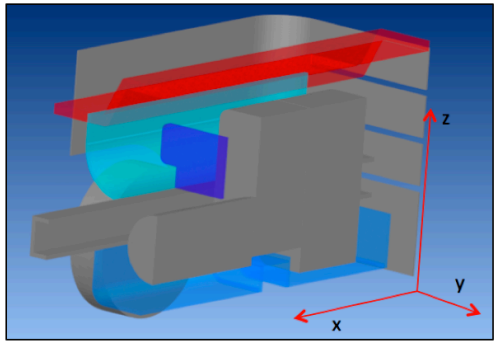

$$\Delta L_p = L_{p,X} - L_{p,bulk}$$

Difference in sound power (local, extended)

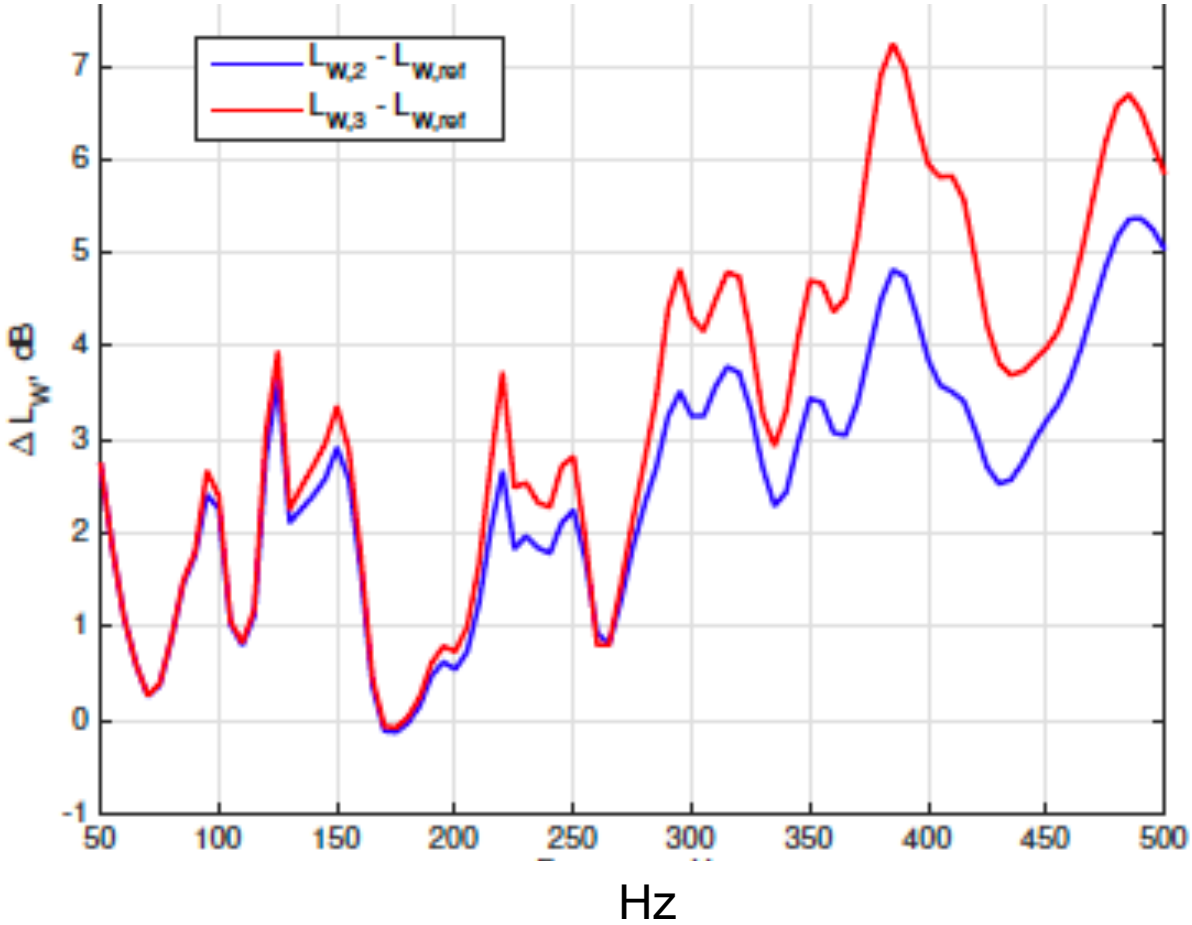

Model verification

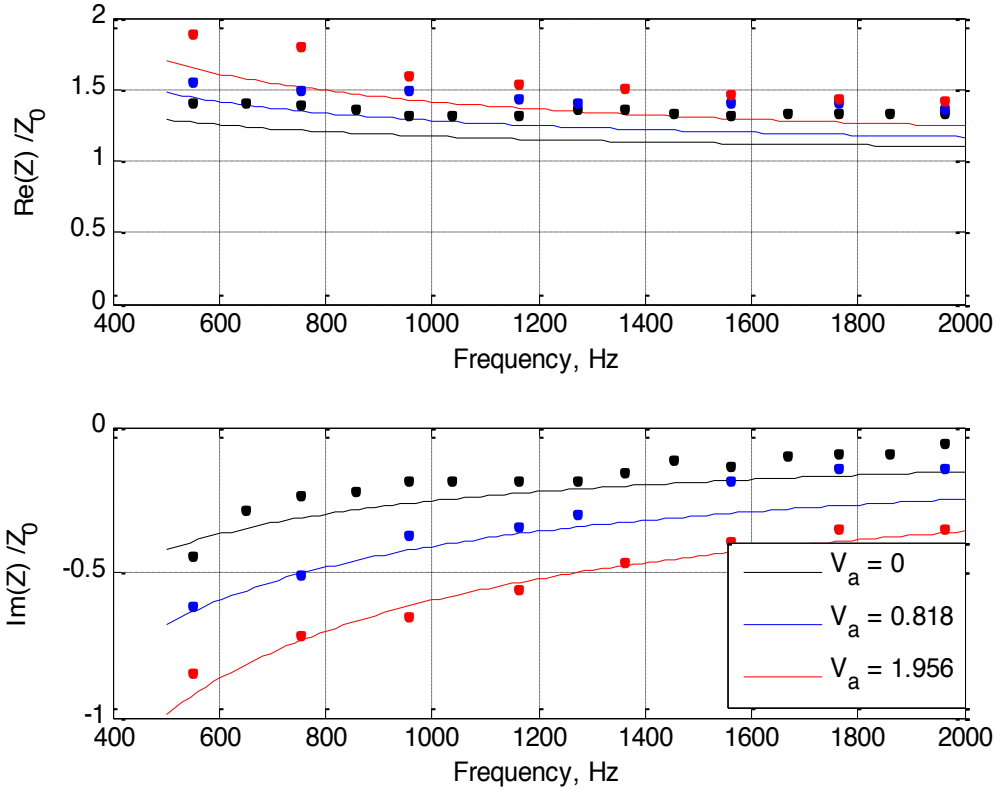

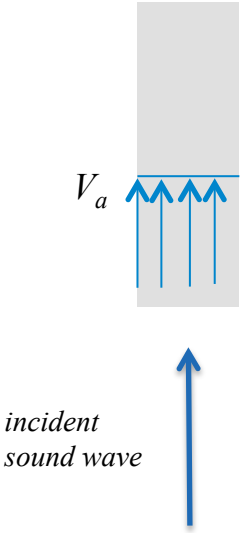

Layers with different flow resistivity

Transfer Matrix Method, TMM

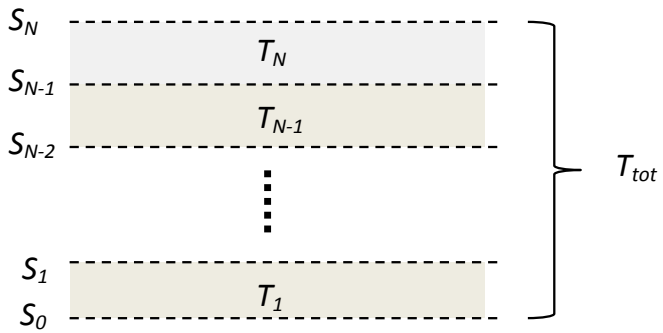

$$T_{tot} = \prod_{i=1}^{N} T_i$$

$$k_x = constant$$

Summary global effects

- Pass-by simulated with FEM and different models of absorber

- Pass-by levels altered up to 1 and 2 dB between material representations.