Tunable isolation band gaps in one-dimensional active piezoelectric sonic crystals

Qicheng Zhang[1,2] , Olga Umnova[1], Yu Lan[2]

[1]*School of Computing, Science and Engineering, University of Salford, United Kingdom*
[2]*College of Underwater Acoustic Engineering College, Harbin Engineering University, P.R. China*

Introduction

Conventional passive periodic structures which are known as sonic crystals (SCs) exhibit unique properties for wave or vibration manipulation, Generally, wave and vibration can propagate along SCs only within specific frequency ranges called “Pass band”, while within other frequency ranges, wave and vibration will be attenuated to a large extend, which are defined as “Band gaps”. However, there exist some limitations in the applications of conventional passive SCs. First of all, the band gaps in passive SCs are fixed and untunable as long as the geometric and material configurations are determined. Also, it is not possible for passive SCs to generate low-frequency band gaps with a small size due to the Bragg scattering mechanism. To overcome the limitations existed in passive SCs, this study develops an analytical model of one-dimensional tunable SCs with both active piezoelectric elements and passive elements. It is shown that band gaps below Bragg centre frequency are generated and tuned by actively optimizing the equivalent electric impedances (or varying the shunting ratio) in active elements. Subsequently, the relationships between tunable band gaps and optimal voltages applied to active elements are calculated numerically. In particular, the values of optimal voltages are determined by the locations of active band gaps, as well as incident displacements or particle velocities. At last, vibration transmission loss in an active finite SCs is numerically simulated by finite elements software (ANSYS Multiphysics) to verify the validity of theoretical model. Examples of these applications include: active periodic mounts and platforms for effective isolation of critical payloads, and active periodic drive shafts.

Theoretical model and results

Based on Electromechanical equivalent method (EEM), passive elements can be expressed as electric circuits with a series of fixed equivalent electric impedances, by the analogy between particle velocity (force) and electric current (voltage). Conversely, active elements are equivalent to those with tunable electric impedances caused by active voltage control.

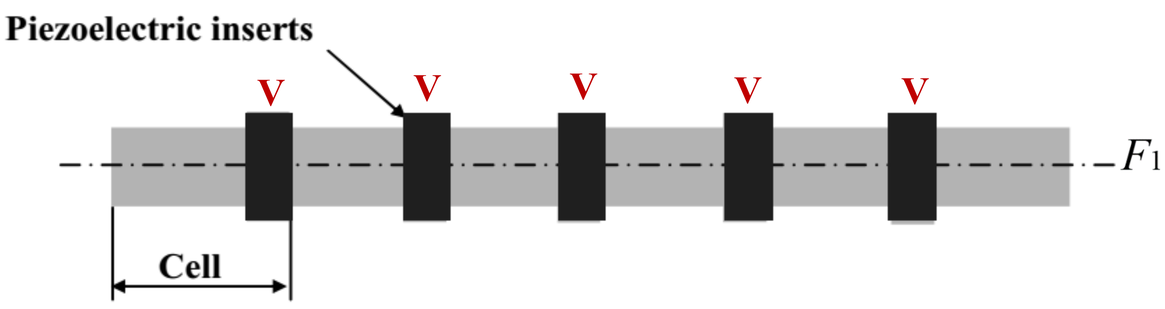

Schematic view of a *N*-period 1-D active piezoelectric SC

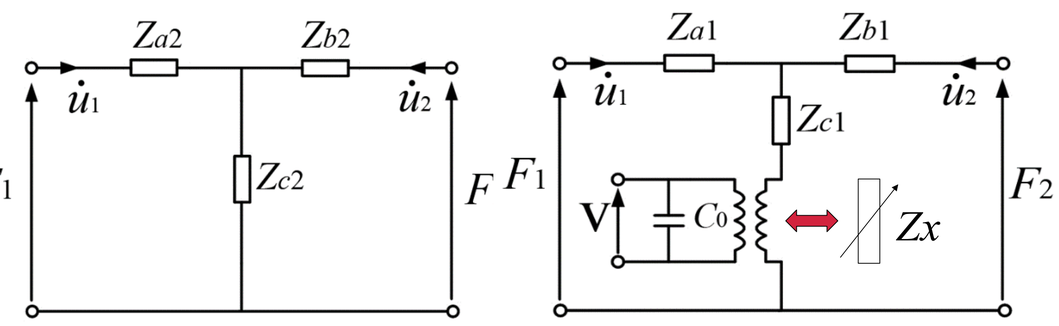

Electromechanical equivalent circuits of passive sub-cell and active sub-cell

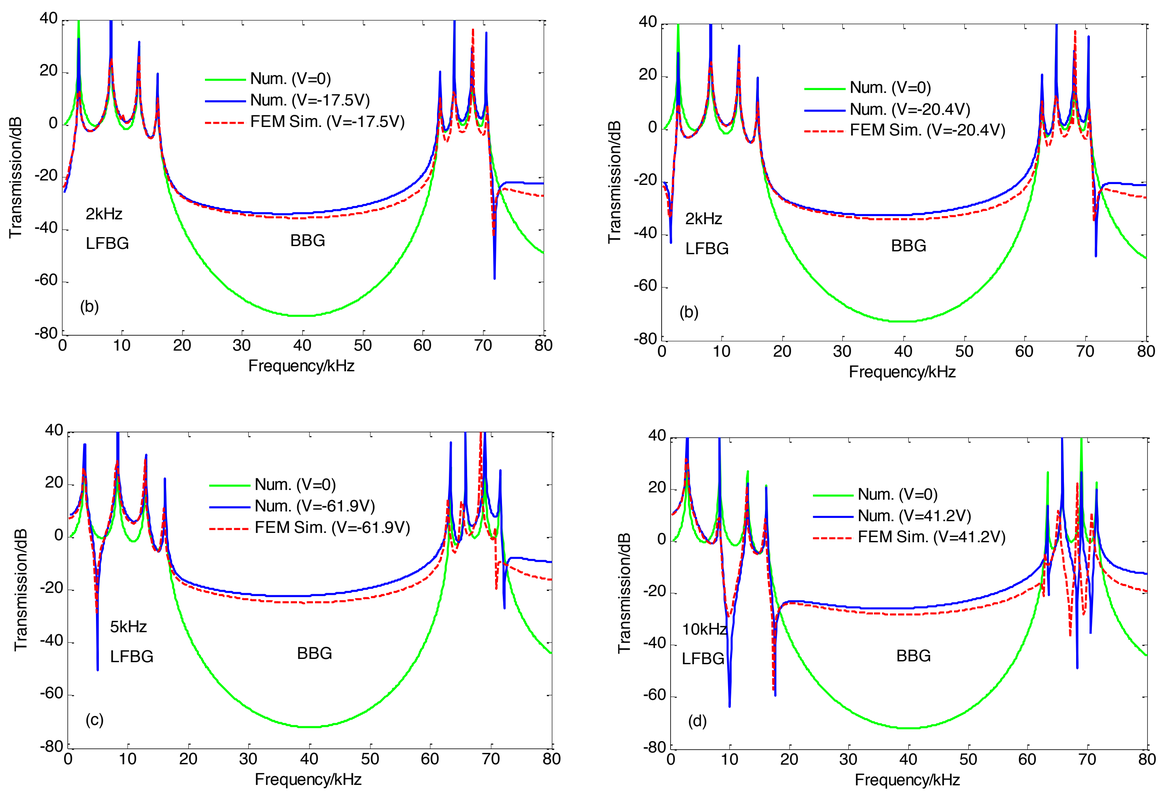

Tunable vibration isolations at specific frequencies in active piezoelectric SCs

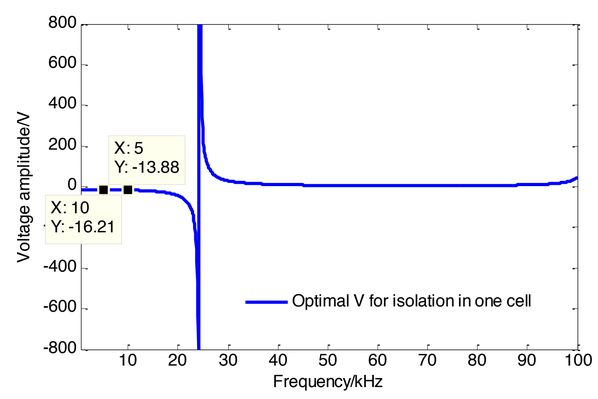

Mater.	Length	Wide/high
PZT-4	14mm	6mm
Resin	14mm	6mm
Incident displacement: **u=16nm**		

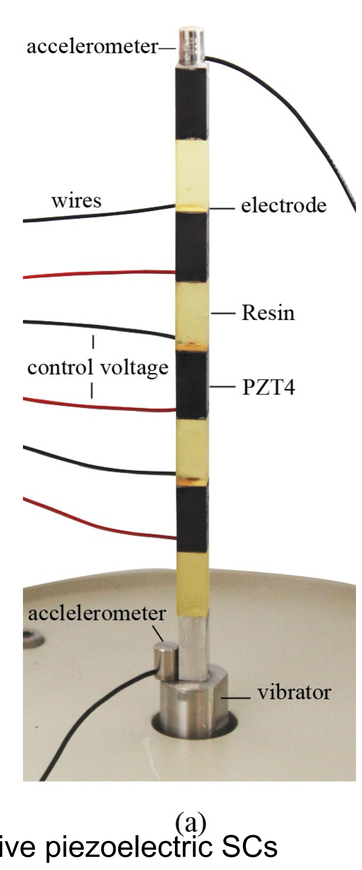

Parameters of photograph of 1-D active piezoelectric SCs

Future work

Attempts to introduce a feedback control to the structures with active elements both used as sensors and actuators are a subsequent extension of the present study. And the optimal feedback strategy for isolation tunability is supposing to be established for the work.

References:
[1] Baz A. Active Control of Periodic Structures. ASME. *J. Vib. Acoust.* 2001;123(4):472-479. doi:10.1115/1.1399052.
[2] Saeed Asiri, Amr M. Baz, Darryll J. Pines, "Active periodic struts for gearbox support system", Proc. SPIE 5386, Smart Structures and Materials 2004: Damping and Isolation, (29 July 2004) doi:10.1117/12.540675; http://dx.doi.org/10.1117/12.540675